AMERICAN GEM SOCIETY
LABORATORIES®

Setting the Highest Standard for Diamond Grading®

AGS 104113366008
NATURAL DIAMOND
March 18, 2021
0.952 cts

The Proprietary Light Performance Diamond Quality® Document

Shape and Style	**Round Brilliant**
Measurements	**6.30 - 6.34 x 3.87 mm**
Cut Grade	**AGS Ideal 0**
Light Performance	**AGS Ideal 0**
Polish	**AGS Ideal 0**
Symmetry	**AGS Ideal 0**
Color Grade	**(H) AGS 2.0**
Clarity Grade	**(VS1) AGS 3**
Carat Weight	**0.952 cts**

Crafted by INFINITY™

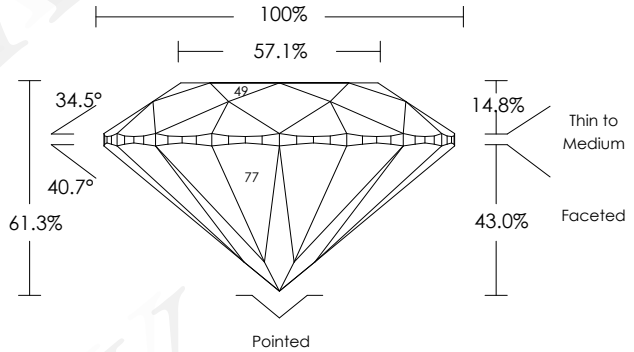

Comments

Fluorescence: Negligible
Additional clouds not shown

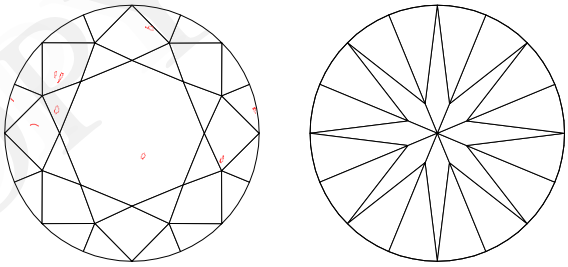

Key to Symbols

Feather
Cloud

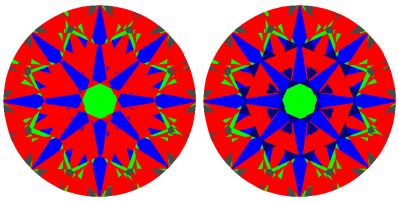

AGS Light Performance Map (ASET®) for this Diamond
U.S. Patent No: 7382445, 7420657, 7372552

Brightness | Less Bright | Contrast | Dynamic Contrast | Light Leakage

For more information, please visit ags.org/aset.

Cut Scale

AGS	0	1	2	3	4	5	6	7	8	9	10
	AGS Ideal	AGS Excellent	AGS Very Good	AGS Good		AGS Fair			AGS Poor		

Color Scale

AGS	0.0	0.5	1.0	1.5	2.0	2.5	3.0	3.5	4.0	4.5	5.0	5.5	6.0	6.5	7.0	7.5	8.0	8.5	9.0	9.5	10.0	To Fancy Yellow	
	Colorless			Near Colorless				Faint			Very Light					Light							Fancy Yellow
GIA	D	E	F	G	H	I	J	K	L	M	N	O	P	Q	R	S	T	U	V	W	X	Y	Z	Fancy Yellow

Clarity Scale

AGS	0	1	2	3	4	5	6	7	8	9	10
	Flawless/IF	Very Very Slightly Included		Very Slightly Included		Slightly Included			Included		
GIA	Flawless/IF	VVS1	VVS2	VS1	VS2	SI1	SI2	SI2 I1	I1	I2	I3

Any client trademarks, logos, or patents are included at client's request merely for information and marketing purposes. AGS Laboratories claims no right, title, interest in, or liability for, the use of such marks, logos, or patents. See ags.org/trademarks for more information.

See www.ags.org/terms for more information and important terms and conditions that may be modified from time to time, and supersede any terms printed on the reverse side of this Report.

UNOFFICIAL COPY

ORIGINAL

AMERICAN GEM SOCIETY
LABORATORIES™
Setting the Highest Standard for Diamond Grading®

THE PROPRIETARY LIGHT PERFORMANCE DIAMOND QUALITY® DOCUMENT

IMPORTANT LIMITATIONS

This Proprietary Light Performance Diamond Quality® Document contains a description of the characteristics of the Diamond based upon the application of the grading techniques, testing procedures, and equipment available to and used by AGS Labs at the time of its examination. Other descriptions of the Diamond may differ depending upon when, how and by whom the Diamond is graded, and may differ in the future as a result of changes and improvements in grading techniques and equipment. This Diamond has been graded using currently available technology and equipment. This Proprietary Light Performance Diamond Quality® Document is not a guarantee, valuation, or appraisal and American Gem Society Laboratories, LLC ("AGS Labs") has made no representation or warranty regarding this Document or the value of the Diamond described herein. The Angular Spectrum Evaluation Tool (ASET®) systems, methods, and images may be covered by one or more of the following US patents: 7,372,522; 7,420,657; 7,336,347; 7,355,683 and 7,382,445.

All three quality factors of Cut, Color, and Clarity can dramatically affect the beauty and value of a diamond. Because of cutting, diamonds with the same color and clarity grades can vary in value by as much as 50% or more. Therefore, it is adviseable to consult a Certified Gemologist® or other credentialed gemologist, before purchasing this Diamond.

AGS Labs makes no representation or warranty as to the HPHT treatment status of this Diamond. Any comment concerning HPHT treatment in this Document is only an opinion based upon tests performed using currently available technology.

AGS Labs can provide this Document for a relatively small fee compared to the present and potential value of the Diamond described herein only because this Document is subject to the following limitations on the liability of AGS Labs, and limitations described in the agreements by which this Document is made, all of which extend to the client for whom this Document was prepared and to every other person to whom this Document is distributed or shown.

> AGS LABS AND ITS EMPLOYEES AND AGENTS SHALL NOT BE LIABLE FOR ANY LOSS, DAMAGE, OR EXPENSE FOR ANY ERROR IN OR OMISSION FROM THIS DOCUMENT OR FOR ITS ISSUANCE OR USE EVEN IF CAUSED BY OR RESULTING FROM THE NEGLIGENCE OR OTHER FAULT (EXCEPT FRAUD, WILLFUL MISCONDUCT, OR GROSS NEGLIGENCE) OF AGS LABS OR ITS EMPLOYEES OR AGENTS, AND SHALL NOT BE LIABLE FOR SPECIAL OR CONSEQUENTIAL DAMAGES FOR ANY ERROR OR OMISSION CAUSED BY THE ACTS OF OTHERS, OR FOR ITS ISSUANCE OR USE EVEN IF ADVISED OF THE POSSIBILITY OF SUCH DAMAGES.

As a protection to the public and AGS Labs, neither this Document nor the name, trademarks or service marks of AGS Labs or its majority shareholder, American Gem Society®, may used in whole or part for purposes of advertising, publicity or promotion without prior written approval of AGS Labs or AGS, and this Document may not be referred to as an appraisal. AGS Labs makes no representation or warranty of the origin of the Diamond described in this Document.

Intellectual property claims concerning or identifying the diamond or the cut of the diamond described in this document are as asserted by the source of the diamonds and are not those of American Gem Society Laboratories®. Trademarks of the source of the diamonds, such as those seen above the profile on the front of this document, are reproduced on this document by American Gem Society Laboratories® with express permission.

This Diamond was examined and tested using some or all of the following: Proportion analyzer, digital carat balance, master color comparison diamonds, optical comparator, standardized and specialized lighting, 10x magnification (fully corrected loupe and binocular microscope), long and short wave ultraviolet light, spectroscope and spectrophotometer.

The AGS GEMOLOGICAL LABORATORIES logo, DIAMOND QUALITY, SETTING THE HIGHEST STANDARD FOR DIAMOND GRADING, and AMERICAN GEM SOCIETY LABORATORIES are registered trademarks of American Gem Society Laboratories®. The AGS GEMOLOGICAL LABORATORIES logo and/or AMERICAN GEM SOCIETY LABORATORIES have been registered in Benelux, Canada, Hong Kong, Israel, Japan, Mexico, Singapore, and the United States Patent and Trademark Office, with other countries pending. AGS, AGS IDEAL, and CERTIFIED GEMOLOGIST are trademarks or registered trademarks of American Gem Society®, with registrations in Benelux, Hong Kong, Israel, Japan, Mexico, and/or the United States Patent and Trademark Office, with other countries pending.

American Gem Society Laboratories, LLC
8917 West Sahara Avenue, Las Vegas, Nevada 89117
Tel (702) 233-6120 Fax (702) 233-6125 support@agslab.com
www.agslab.com